An application of algebraic geometry in control theory

Jodeci Wheaden

December 13, 2013

Abstract.Control theory is the study of dynamical systems with many applications. In this paper we will discuss how to apply techniques from algebraic geometry to find equilibrium points. We demonstrate this technique with a basic example of congestion control. We introduce the basic terminology of feedback systems and summarize results on Groebner bases that we apply.

1. Introduction

Control theory is a branch of mathematics related to engineering, that is concerned with the behavior of dynamical systems with inpts. The application of algebraic geometry is heavily involved within this paper in order to discover the steady state of our constructed congestion model.

We apply methods of algebraic geometry to a congestion model. This model presents a system of polynomial equations which we investigate to solve the points of equilibrium. Use Groebner Bases, which converts an intractable system of polynomial equations into equations where the unknowns can be easily computed.

2. Control Theory

In this section we discuss the idea behind control theory. We begin with the basic definition of the term control system and gradually illustrate the notion of control theory. Control theory involves both mathematics and engineeering that deals with the behavior of dynamical systems with input. The input of the system is influenced by the controller in order to obtain users' desired effect. The main objective of control theory is to take one's desired outcome and determine the action necessary to correct for difference in the desired and actual outcomes.

Definition 2.1 : The *input* is the stimulus, excitation or command applied to a control system, typically from an external energy source, usually in order to produce a specified response from the control system.

Definition 2.2 : The *output* is the actual response obtained from the control system. The output may or may not be equal to the specified response implied by the input.

Defintion 2.3 : A *control system* is an arrangement of physical components connected or related in such a manner as to command, direct, or regulate itself or another system.

There exists two types of control systems: a open loop control system and a closed loop control system. A open loop control system is a system in which the control action is independent of the output. A basic example of this particular type of control system is a microwave oven. The output is the temperature of the product and does not influence the control action which is to heat the product. A closed loop control system is a system in which the control action is dependent on the output. We also call these feedback systems. A feedback system is a system in which the output is compared with the input to the system so that the appropriate control action can be performed as some function of the output and input. The basic feedback system presents us with this structure; first the user gives the system a reference or a desired output. Then the controller determines the action that should be taken. The action is then implemented in the system. Then we continue through the loop to the sensor where the output is measured and this process continues until the user shuts the system off. There are two types of feedback systems: a positive feedback system and a negative feedback system.

An example of a positive feedback system is a microphone when it screeches. For this effect to take place one has to stand in close proximity with a microphone in hand to the speaker system. This allows sound to cycle from within the microphone and into the speaker system creating the screeching noise that at time presents itself. An example of a negative feedback system is cruise control. A user enters a speed at which they desire their car to travel. The controller decides whether or not to increase or decrease the throttle depending on the outside forces. Therefore if a vehicle is traveling up a hill the car will sense that environmental change and adjust the speed of the car to handle those forces by putting more pressure on the throttle. Another example of a negative feedback system is that of a heating ventilation and air conditioning system. Lets examine a specific example such as if a user sets their thermostat at a particular temperature such as 72 degrees. Depending on the temperature outside it can either cause the temperature to rise or fall within the user's home. Let's say it is a moderately warm day outside and it causes the temperature to rise to 76 degrees within the user's home. The sensor will sense that change and the controller will determine the corrective action necessary to take place which in this case would be to allow the air conditioning to come on. For some systems as in the case for this system there does exist a prescribed tolerence because if not the system would always be on because it would only take the slightest deviation away from the desired outcome for either the heat or airconditioning to come on. Network congestion is another example of negative feedback, and we explore this particulr idea later in this paper.

A system's behavior can be modeled by differential equations. For example

$$\frac{dX_1}{dt} = f_1(X_1, ..., X_n)$$

$$\frac{dX_2}{dt} = f_2(X_1, ..., X_n)$$

$$.$$

$$.$$

$$.$$

$$\frac{dX_n}{dt} = f_n(X_1, ..., X_n)$$

Equilibria correspond to points $(X_1, ..., X_n) \in \mathbb{R}^n$ such that $\frac{dX_1}{dt} = ... = \frac{dX_n}{dt} = 0$. Equivalently, $f_1 = f_2 = ... = f_n = 0$. If $f_1, f_2, ..., f_n$ are rational functions or polynomials we can use tools from algebraic geometry to solve the system.

3. Algebraic Geometry

Linear Algebra is the concept we must begin by introducing. This introduction into linear systems allows us to prepare our audiance for the polynomial system that we obtain later in this paper. When given a system of linear equations one may use the algorithm of Gaussian elimination in order to properly solve for the unknowns within the system.

Example 3.1

$$2x + y - 2z - 3 = 0$$

$$x - y - z = 0$$

$$x + y + 3z - 12 = 0$$

$$x = \frac{7}{2}, y = 1, z = \frac{5}{2}$$

This point displays a single point where all of these planes intersect one another.

Definition 3.1 : A subset $I \subset k[x_1, ..., x_n]$ is an ideal if it satisfies:
(i)$0 \in I$
(ii)If $f, g \in I$, then $f + g \in I$
(iii)If $f\ inI$ and $h \in k[x_1, ..., x_n]$, then $hf \in I$.

Definition 3.2 : A **monomial ordering** $>$ on $k[x_1, ..., xn]$ is any relation $>$ on $\mathbb{Z}^n_{\geq 0}$, or equivalently, any relation on the set of monomials $x^a, a \in \mathbb{Z}^n_{\geq 0}$ satisfying: (i) $>$ is a total (or linear) ordering on $\mathbb{Z}^n_{\geq 0}$. (ii)If $\alpha\beta$ and $\gamma \in \mathbb{Z}^n_{\geq 0}$, then $\alpha + \gamma > \beta + \gamma$. (iii)$>$ is a well-ordering on $\mathbb{Z}^n_{\geq 0}$. This means that every nonempty subset of $\mathbb{Z}^n_{\geq 0}$ has a smallest element under $>$.

Definition 3.3 : (Lexicographic Order). Let $\alpha = (\alpha_1, .., \alpha_n)$ and $\beta = (\beta_1, ..., \beta_n) \in \mathbb{Z}^n_{\geq 0}$. We say $\alpha >_{lex} \beta$ if, in the vector difference $\alpha - \beta \in \mathbb{Z}^n_{\geq 0}$, the leftmost nonzero entry is positive. We will write $x^\alpha >_{lex} x^\beta$ if $\alpha >_{lex} \beta$.

An ideal is a collection of polynomials that are generated by a set.

Definition 3.4 : Let k be a field, and let $f_1, ..., f_s$ be polynomials in $k[x_1, ..., x_n]$. Then we set $V(f_1, ..., f_s) = \{(a_1, ..., a_n) \in k^n : f_i(a_1, ..., a_n) = 0 \forall 1 \leq i \leq s\}$. We call $V(f_1, ..., f_s)$ the **afline variety** defined by $f_1, ..., f_s$. Variety is a set of all solutions that make ideal vanish or equal 0.Therefore the set of solutions $V = \{(X_1, ..., X_n) \in \mathbb{R}^n\ f_1(X_1, ..., X_n) = ... = f_s(X_1, ..., X_n) = 0\}$ is called a variety, where V denotes the affline varieites. We desire this characteristic because want to solve a system of polynomials equations.

$$f_1(X_1, ..., X_n) = 0$$

$$f_2(X_1, ..., X_n) = 0$$

.

.

$$f_s(X_1, ..., X_n) = 0$$

We can characterize V by the polynomials that vanish on V. $I(V)$ is an ideal in the ring $\mathbb{C}[X_1, .., X_n$.

Example 3.2: Let $f_1 = xy+1, f_2 = y^2-1 \in k[x, y]$ with the lex order. Dividing $f = xy^2-x$ by $F = (f_1, f_2)$ the result is

$$xy^2 - x = y \cdot (xy + 1) + 0 \cdot (y^2 - 1) + (-x - y)$$

With $F = (f_2, f_1)$, however, we have

$$xy^2 - x = x \cdot (y^2 - 1) + 0 \cdot (xy + 1) + 0$$

. The second calculation shows that $f \in f_1, f_2$. Then the first calculation shows that even if $f \in f_1, f_2$, it is still possible to obtain a nonzero remainder on division by $F = (f_1, f_2)$. Hence depending on the ordering one may gain different remainders.Therefore when dealing with a collection of polynomial equations we can ask the question of whether there exist a "good generating" set for that particular ideal. This question leads us to the algorithm to compute a Groebner basis.

Definition 3.6 : Given a nonzero polynmial $f \in k[x]$, let

$$f = a_0x^m + a_1xm - 1 + ... + a_m$$

where $a_i \in k$ and $a \neq 0$ [thus $m = deg(f)$]. Then we say that a_0x^m is the leading term of f written $LT(f) = a_0x^m$.

Definition 3.6 : Fix a monomial order. A finite subset $G = g_1, ..., g_t$ of an ideal I is said to be a **Groebner basis** (or **standard basis**) if

$$< LT(g_1), ..., LT(g_t) >=< LT(I) > .$$

Hence a set is said to be a Groebner basis of the ideal if and only if there exist a leading term of any particular element that can be divisible by one of the other leading terms within the set. The problem that presented itself prior was that when one attempted division of functions in an ideal depending on how they were fomulated within the division process

it could cause for there to exist a remainder. This process of Groebner basis solved that problem by always allowing the remainder to equal zero.

When it comes to solving a system of polynominal equations we shall use the idea of Groebner basis with respect to Lex Ordering to complete this task. An ideal is a generated set of polynomial equations. Groebner basis is a way of taking a system of polynomial equations an converting them into identifiable equations so we can compute the unknowns. The term Groebner basis is that when in a particular field $k[x_1, x_2, ..., x_n]$ there exists a generated set of an ideal with a zero remainder. For instance we may be presented with equations such as these

$$g_1 = x + y + z^2 - 1$$

$$g_2 = y^2 - y - z^2 + z$$

$$g_3 = 2yz^2 + z^4 - z^2$$

$$g_4 = z^6 - 4z^4 + 4z^3 - z^2$$

It can be seen that equations (1) and (3) have the same solution. However, since $g_4 = z^6 - 4z^4 + 4z^3 - z^2 = z^2(z-1)^2(z^2+2z-1)$ the z values are $0, 1, -1+\sqrt{2}$ and $-1-\sqrt{2}$. Next we shall substitute our computed z values into g_3 and g_2. This will reveal to us the corresponding x and y values.

4. Congestion Control

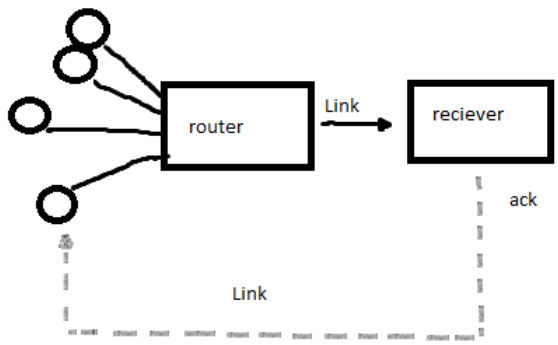

A more specific form of control theory that we focus on is that of Congestion Control in reference to a computer system. Congestion control deals with the user having control over the rate of their output. The circumstance that I have built allows for my users to have control over the rate at which their packages are sent to the source, called a window size.The source then sends back to the user an acknowledgement to allow the input or in my case the computer knowledge that it has recieved it's first packet of their sequence of request. Based on the amount of users and the rates at which the packages are sent the window size can be adjust for that change. Hence if acknowledgements come quickly ten window size increase but if acknowledgements slow down window size is cut in half. For instance lets ioslate the first user and set its window size to 5. Therefore that means packets 1,2,3,4,5 are sent before recieving the acknowledgement for packet,1.

With the use of maple we were able to conduct a simple experiment. With four users. They each have a window size denoted by x,y,z,w. A window size are the number of packets sent before an acknowledgement is sent back to the respective user for the first packet. Buffer size of router is indicated as b. The router capacity c is a constant and we want to ignore all dropped packets.We have to consider the buffer because for a temporay amount of time it does contain data from these multiple sources.

$$\frac{dx}{dt} = \frac{c}{b} - c(1 + \frac{x^2}{2})$$

$$\frac{dy}{dt} = \frac{c}{b} - c(1 + \frac{y^2}{2})$$

$$\frac{dz}{dt} = \frac{c}{b} - c(1 + \frac{z^2}{2})$$

$$\frac{dw}{dt} = \frac{c}{b} - c(1 + \frac{w^2}{2})$$

$$\frac{db}{dt} = \frac{c(x + y + z + w)}{b} - c$$

We desire the equilibrium points in our system so we have to set our derivative equations equal to zero as follows:

$$f_1 = \frac{c}{b} - c(1 + \frac{x^2}{2}) = 0$$

$$f_2 = \frac{c}{b} - c(1 + \frac{y^2}{2}) = 0$$

$$f_3 = \frac{c}{b} - c(1 + \frac{z^2}{2}) = 0$$

$$f_4 = \frac{c}{b} - c(1 + \frac{w^2}{2}) = 0$$

$$f_5 = \frac{c(x + y + z + w)}{b} - c = 0$$

In order to use the desired algorithm of Groebner Bases we have to convert the rational system of equations to a system of polynomial equations.$f_1, ..., f_5$ are not polynomials, but we can multiply each by $\frac{b}{c}$ without changing the solution space. We still call these $f_1, ..., f_5$.

$$f_1 = \frac{b}{c}(\frac{c}{b} - c(1 + \frac{x^2}{2})) = 0 =$$

$$f_2 = \frac{b}{c}(\frac{c}{b} - c(1 + \frac{y^2}{2})) = 0$$

$$f_3 = \frac{b}{c}(\frac{c}{b} - c(1 + \frac{z^2}{2})) = 0$$

$$f_4 = \frac{b}{c}(\frac{c}{b} - c(1 + \frac{w^2}{2})) = 0$$

$$f_5 \frac{b}{c}(\frac{c(x+y+z+w)}{b} - c = 0)$$

Now we are presented with the appropriate polynomial system of equations.

$$f_1 = 1 - b(1 + \frac{x^2}{2})$$

$$f_2 = 1 - b(1 + \frac{y^2}{2})$$

$$f_3 = 1 - b(1 + \frac{z^2}{2})$$

$$f_4 = 1 - b(1 + \frac{w^2}{2})$$

$$f_5 = x + y + z + w - b$$

The following set is a Groebner basis for $< f_1, f_2, f_3, f_4 f_5 >$.

$$g_1 = 256 - 512b + 256b^2 + 40b^4 - 40b^3 + b^6$$

$$g_2 = -32w + 8b - 8b^2 - b^4 + 32bw + 4b^3w$$

$$g_3 = -256 + 256b + 40b^3 - 40b^2 + b^5 + 128w^2$$

$$g_4 = 8b - 8b^2 - b^4 - 32z + 32bz + 4b^3z$$

$$g_5 = 256 - 256b - 40b^3 + 104b^2 - b^5 - 192bw - 192bz + 384zw$$

$$g_6 = -256 + 256b + 40b^3 - 40b^2 + b^5 + 128z^2$$

$$g_7 = 8b - 8b^2 - b^4 - 32y + 32by + 4b^3y$$

$$g_8 = 256 - 256b - 40b^3 + 104b^2 - b^5 - 192by - 192bw + 384yw$$

$$g_9 = 256 - 256b - 40b^3 + 104b^2 - b^5 - 192bz - 192by + 38zy$$

$$g_{10} = -256 + 256b + 40b^3 - 40b^2 + b^5 + 128y^2$$

$$g_{11} = x + y + z + w - b$$

Observe that g_1 is with respect to b only. The polynomials g_2,g_4 and g_7 are linear in w, z, y, respectively. Solving for each we have

$$g_2 = -32w + 8b - 8b^2 - b^4 + 32bw + 4b^3w = 0 \implies b^4 + 8b^2 - 8b = 4b^3w + 32bw - 32w$$

$$b^4 + 8b^2 - 8b = w(4b^3 + 32b - 32) \implies w = \frac{b^4 + 8b^2 - 8b}{4b^3 + 32b - 32}$$

$$g_4 = 8b - 8b^2 - b^4 - 32z + 32bz + 4b^3z = 0 \implies b^4 + 8b^2 - 8b = 4b^3z + 32bz - 32z$$

$$b^4 + 8b^2 - 8b = z(4b^3 + 32b - 32) \implies z = \frac{b^4 + 8b^2 - 8b}{4b^3 + 32b - 32}$$

$$g_7 = 8b - 8b^2 - b^4 - 32y + 32by + 4b^3y = 0 \implies b^4 + 8b^2 - 8b = 4b^3y + 32by - 32y$$

$$b^4 + 8b^2 - 8b = y(4b^3 + 32b - 32) \implies y = \frac{b^4 + 8b^2 - 8b}{4b^3 + 32b - 32}$$

We have now discovered that

$$y = z = w = \frac{b^4 + 8b^2 - 8b}{4b^3 + 32b - 32}$$

.
To obtain the value of x we use the $g_{11} = 0$ which involves all of the unknowns.

$$x + 3(\frac{b^4 + 8b^2 - 8b}{4b^3 + 32b - 32}) = b$$

$$x = b - 3(\frac{b^4 + 8b^2 - 8b}{4b^3 + 32b - 32})$$

Lets find a common denominator

$$x = (\frac{b^4 + 8b^2 - 8b}{4b^3 + 32b - 32}) - 3(\frac{b^4 + 8b^2 - 8b}{4b^3 + 32b - 32})$$

Once we simplify this equation we shall obtain that $x = \frac{b^4+8b^2-8b}{4b^3+32b-32}$, which means x,y,z,w are all equal. Thus, $x_e = y_e = z_e = w_e = \frac{b_e}{4}$

5. Conclusion

Understanding the behavior of a control system may involve solvong a system of polynomial equations. Through the use of algebraic geometry we were able to do this efficiently.The illustration of this congestion control model gave us a more indepth idea being the behavior of a control systems and how they can be implemented in every day activities.

References

DiStefano, Joseph J., Allen R. Stubberud, and Ivan J. Williams. *Schaum's Outline Of Theory And Problems Of Feedback And Control Systems*. New York: McGraw-Hill, 1995. eBook Collection (EBSCOhost). Web. 13 Dec. 2013.

Cox, David Little, John and O'Shea, Donal. *Ideals, Varieties and Algorithms*. New York: Springer Science+Business Media, 2007. Print.